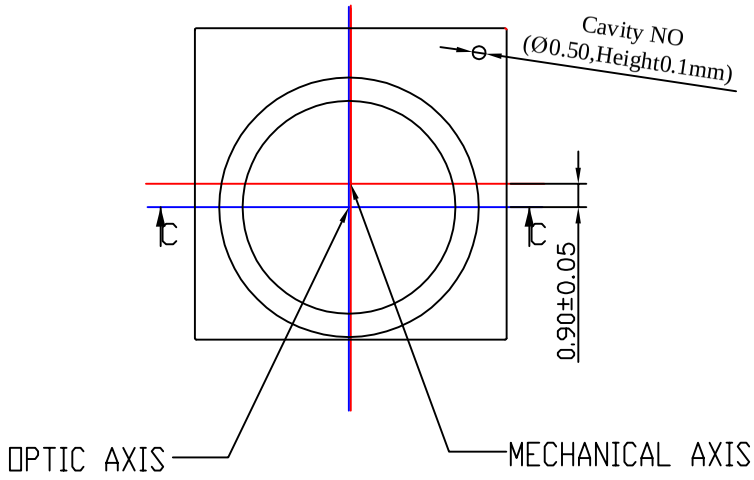

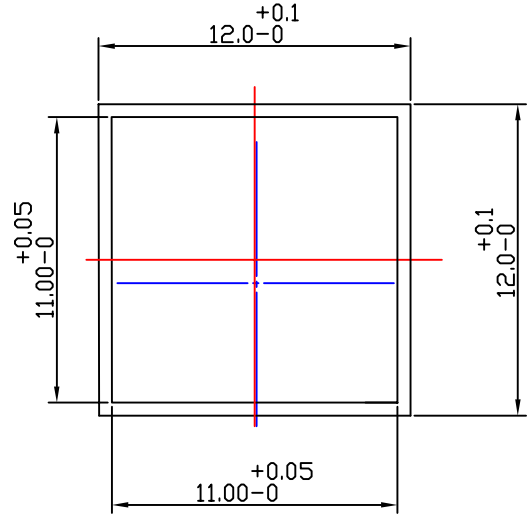

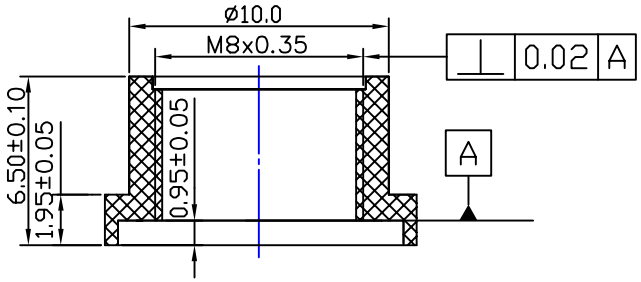

C-C

Note:
1.All Draft Angle:＜1°
2.Remove Flash On All Edges

NO.	REVISION CONTENT	DATE	NAME
D			
C			
B			
A	INITIAL RELEASE.	2.12/04	Kevin

Dfaut tolerance	
Angle	1°
X.X	±0.10
X.XX	±0.05

Marker	signature	Date
Design	Kevin	2.5/04
Check		
Approve		

Material					
Unit	mm	Scale	5 : 1	Part Name	CMT951C
Rev	A	No		Description	HOLDER

Sunex China
Tel: (86) 21-67741423
Fax: (86) 21-57740268